PRODUCT NO	CONDUCTOR POS NO	CONDUCTOR ASSY POS NO	CONTACT PLATING	HOUS'G COLOR
67968-001	6/4	2,3,4,5	15u" AU	GRAY
67968-001LF				
67968-002	6/6	1,2,3,4,5,6	15u" AU	GRAY
67968-002LF				

LEAD FREE PRODUCT NO.

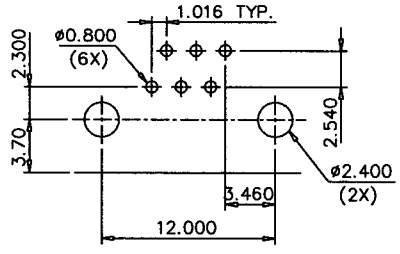

P.C.B.(.063 THK)
CONNECTOR MOUNTING SIDE AS SHOWN

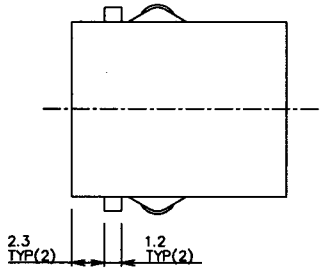

NOTE:

1. FOR VISUAL, MECHANICAL AND FUNCTIONAL, REQUIREMENTS SEE PRODUCT SPEC. 110-015.
2. HOUSING MAT'L: GLASS REINFORCED NYLON 66 ZYTEL-FR50, UL 94 V-0.
3. GOLD WIRE MAT'L: PHOSPHOR BRONZE 0.46 DIA.
4. A. STANDARD PACKAGING METHOD(USE TRAY): SEE GS-14-351.
   B. NON-STANDARD PACKAGING METHOD(USE TUBE): SEE GS-14-358.
   THE PART NO. SHOULD BE SUFFIXED WITH "T" OR "TLF". (E.G.67968-001T OR 67968-001TLF)
5. MATABLE PLUG: PLUG CONFORMED TO FCC TYPE 623.
6. THIS PRODUCT MEETS EUROPEAN UNION DIRECTIVES AND OTHER COUNTRY REGULATIONS AS DESCRIBED IN GS-22-008.
7. THE HOUSING WILL WITHSTAND EXPOSURE TO 260°C PEAK TEMPERATURE FOR 10 SECONDS IN A WAVE SOLDER APPLICATION WITH A 1.6mm MINIMUM THICK CIRCUIT BOARD.
8. IF LF P/N PACKAGING MEETS GS-14-920 SPECIFICATION.

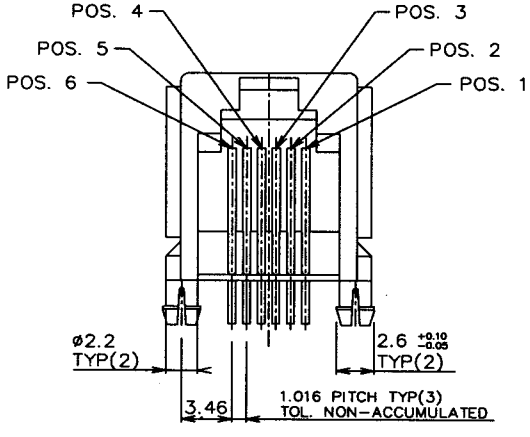

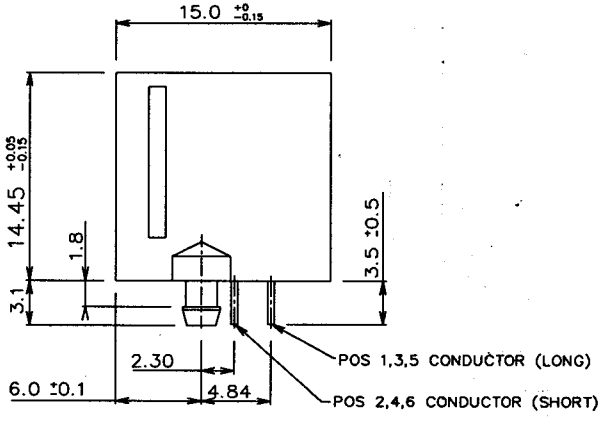

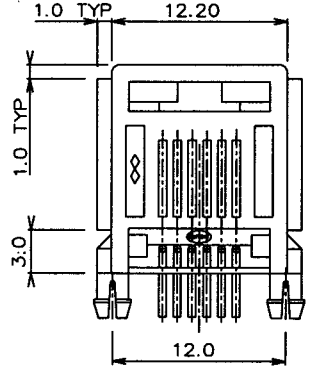

mat'l code				tolerance unless otherwise specified			CUSTOMER COPY	FCI www.fciconnect.com	
rev.	ecn no.	dr	date	linear	.0 ± 0.25				
H	T10249				.00 ± 0.13		projection	title	LOW PROFILE 6POS PCB MOD JACK
J	T80019		01/15/98		.000± 0.05				
k	T80274		07/02/98	angles	± 2°				
L	T03-0443	WL	10/06/03	dr	KC CHOU	11/18/91	unit mm/inch	product family MOD JACK	code TWN
M	N05-0002	YS	01/06/04	engr	TONY CHIEN	11/25/91		size A3 / dwg no. 67968	
				chr	TONY CHIEN	11/25/91	scale 3:1		sheet 1 OF 1
				appd	JENN TSAO	11/25/91			
sheet	revision	M							
index	sheet	1							

Tous droits strictement reservés. Reproduction ou communication a des tiers int sous quelque forme que ce soit sans autorisation ecrite du propietaire. propriete de c BERG ELECTRONICS. Droits de reproduction BERG ELECTRONICS bv

All rights strictly reserved. Reproduction or issue to third parties in any for whatever is not permitted without written authority from the proprietor. Property of c BERG ELECTRONICS. Copyright BERG ELECTRONICS bv

PDM: Rev:M STATUS:Released Printed: Feb 19, 2008